UPS PRODUCT INFORMATION

Track Series Battery Harness Kit
TBHK-0009-24
Dimensions (mm / in)

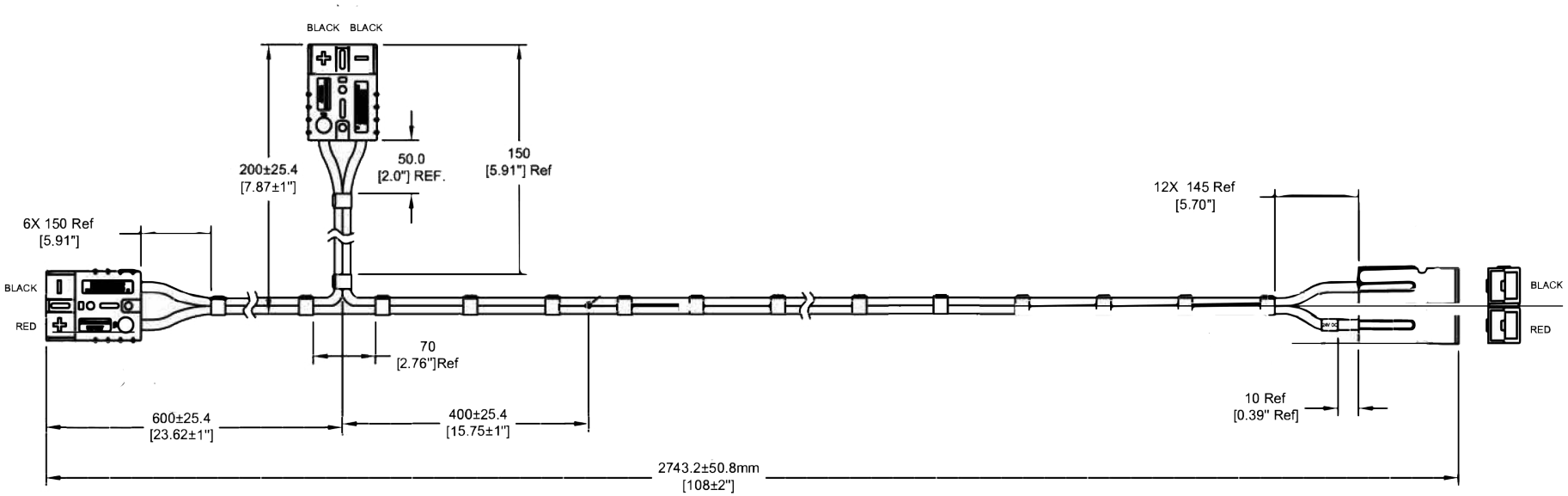

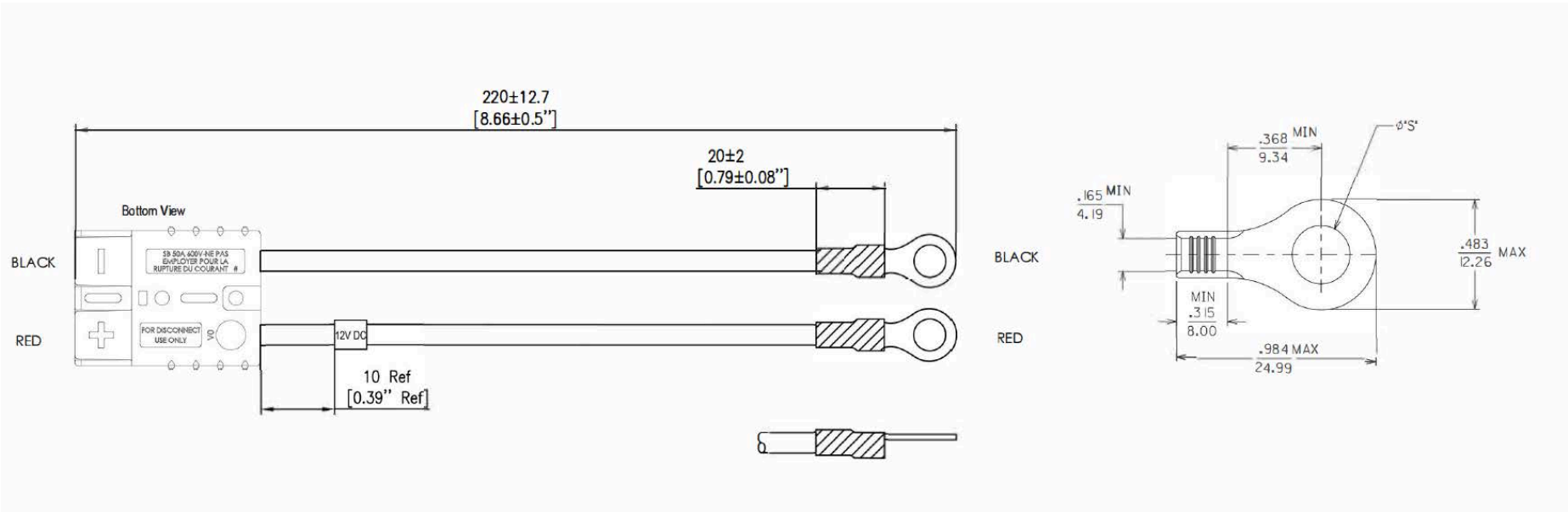

Battery Terminal Connectors
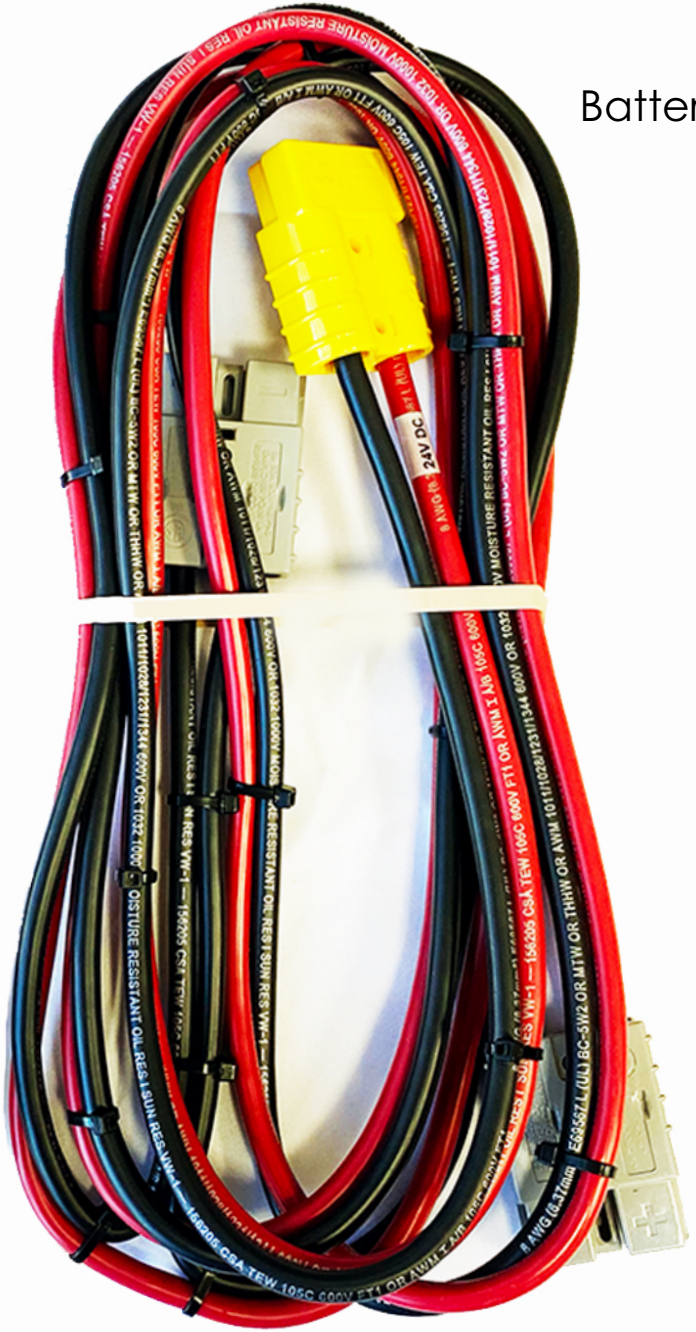
Battery Harness